ITEM NO.	QTY	PART NUMBER	DESCRIPTION
1	6	60655K572	ADJ HANDLE, 1/4"-20 THRD, 1-9/16" LG, ORANGE HANDLE
2	6	90298A583	5/16" DIA X 1" LG SHOULD SCREW, 1/4"-20 THRD
3	8	91845A125	3/8"-24 HEX NUT
4	8	S24LW	CAM FOLLOWER, 3/4" OD
5	2	MD-09-0057-00	UPPER GUIDE
6	2	MD-09-0252-01	FLAP LEDGE
7	1	MD-09-5372-00	POSITION RULE
8	2	MD-09-5638-00	UPPER GUIDE MOUNT
9	1	MD-09-6153-00	UPPER GUIDE MOUNT
10	6	MD-09-6320-00	CLAMP BAR
11	2	MD-09-7089-00	TOP GUIDE NUT
12	4	MD-09-7090-00	UPPER GUIDE MOUNT
13	2	MD-09-7091-00	MAGAZINE GUIDE MOUNT
14	2	MD-09-7092-00	CLIP BASE CHANNEL
15	2	SA-08-090-0001-00	MAGAZINE CLIP SENSOR ASSEM

REVISIONS			
REV.	DESCRIPTION	DATE	INITIALS

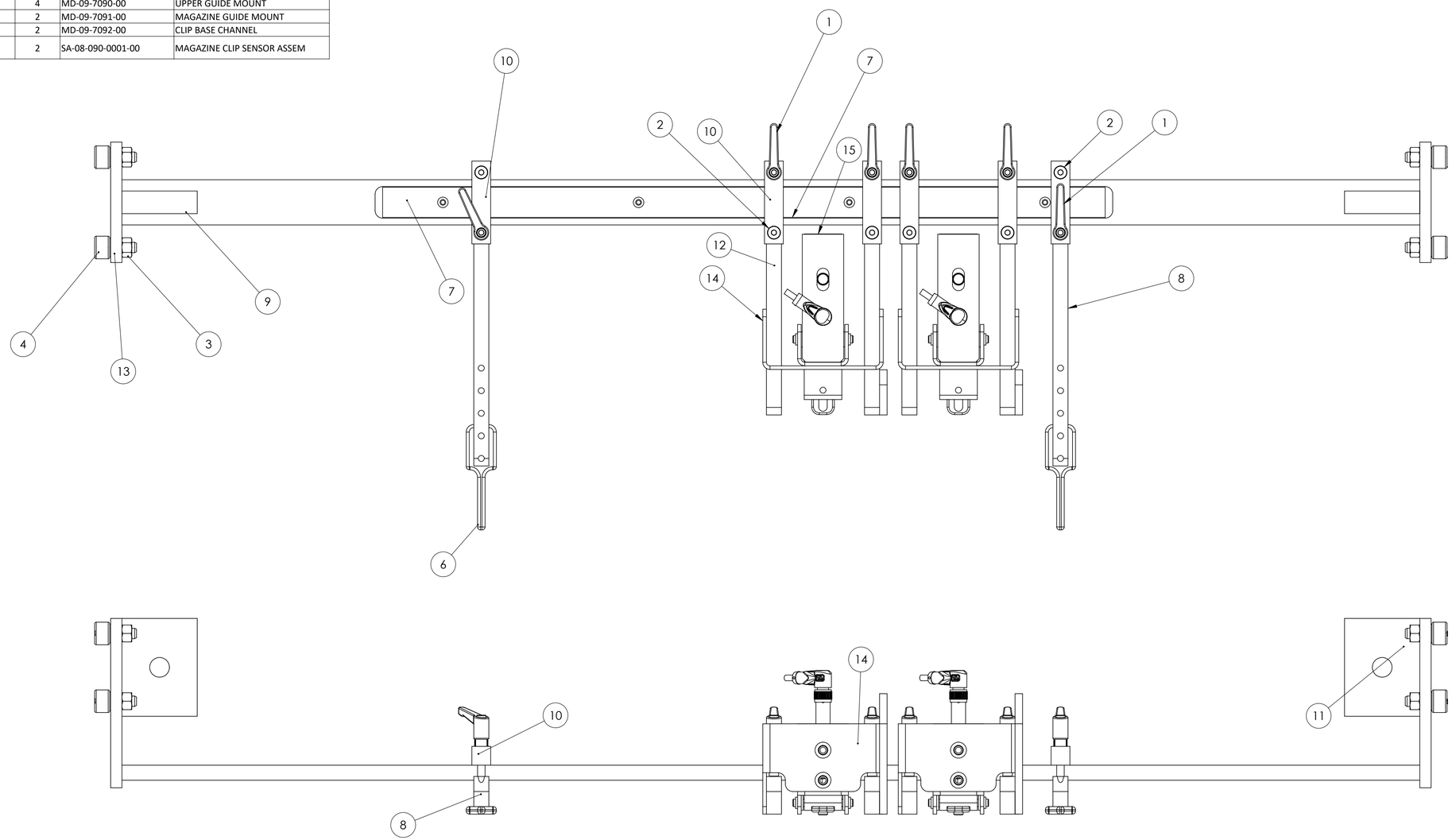

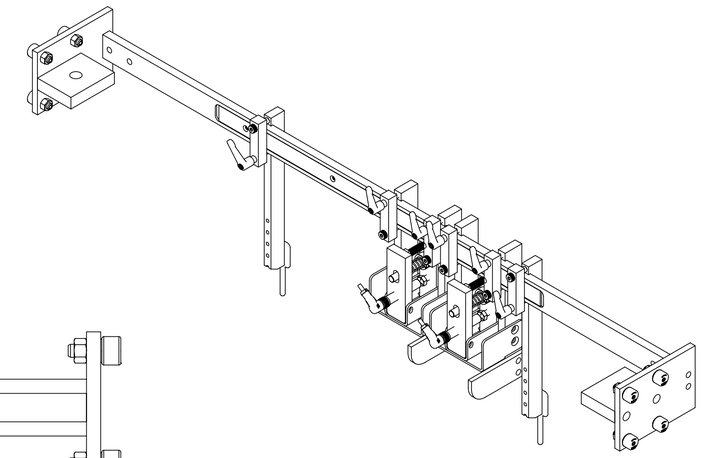

NOTES:
1. USE STAINLESS STEEL HARDWARE UNLESS OTHERWISE SPECIFIED.

PROPRIETARY AND CONFIDENTIAL
THE INFORMATION CONTAINED IN THIS DRAWING IS THE SOLE PROPERTY OF SWITCHBACK GROUP. ANY REPRODUCTION IN PART OR AS A WHOLE WITHOUT THE WRITTEN PERMISSION OF SWITCHBACK GROUP IS PROHIBITED.

UNLESS OTHERWISE SPECIFIED:		NAME	DATE
DIMENSIONS ARE IN INCHES TOLERANCES: FRACTIONAL ± .015 ANGULAR: MACH ±0.5° BEND ±5° TWO PLACE DECIMAL ± .010 THREE PLACE DECIMAL ± .005	DRAWN	RB	8/21/2020
	DESIGNER		
	ENG APPR.		
INTERPRET GEOMETRIC TOLERANCING PER:	MFG APPR.		
	Q.A.		
MATERIAL	COMMERCIAL PART		
FINISH	EST. WEIGHT (lbs): 17.32		
	DO NOT SCALE DRAWING		

SWITCHBACK GROUP

TITLE:

UPPER CARTON SUPPORT

SIZE	DWG. NO.	REV
D	1702-109A	
SHEET SCALE: 1:2		SHEET 1 OF 1

ASM 1702-109A D